DATE	REV.	DESCRIPTION	DR	CK	REL

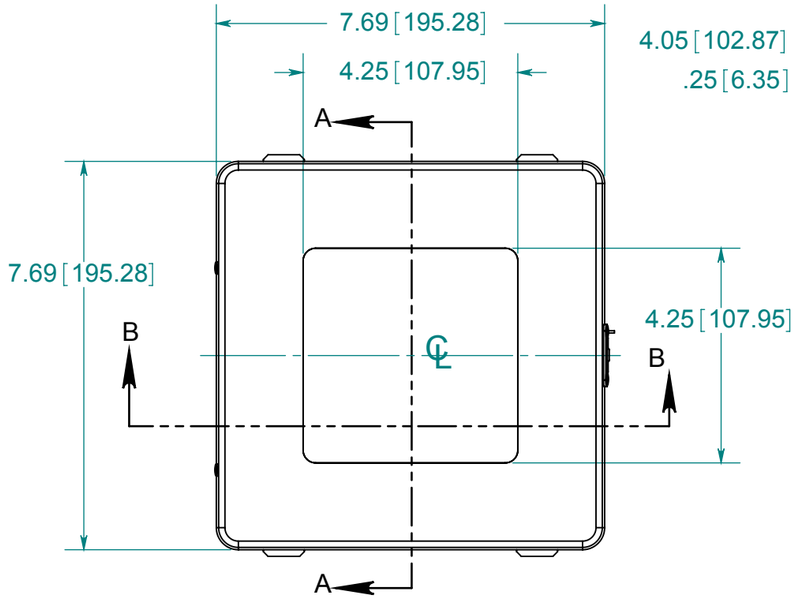

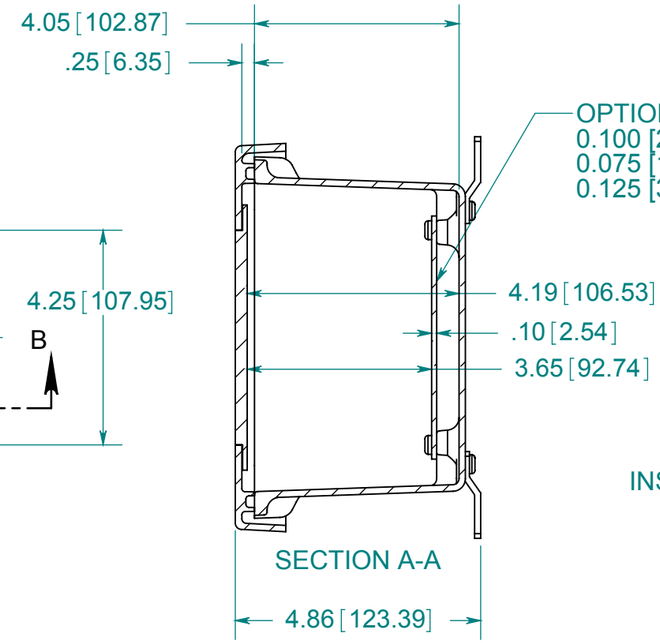

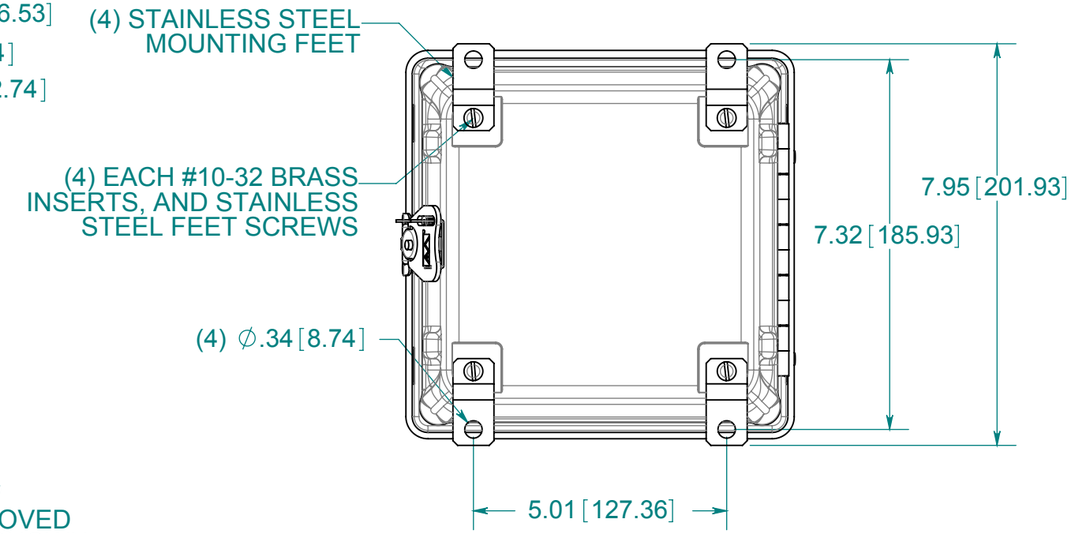

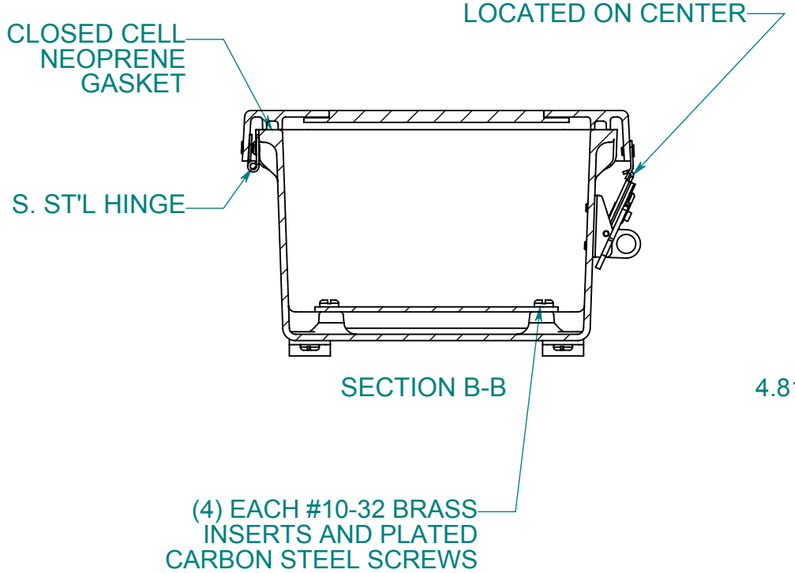

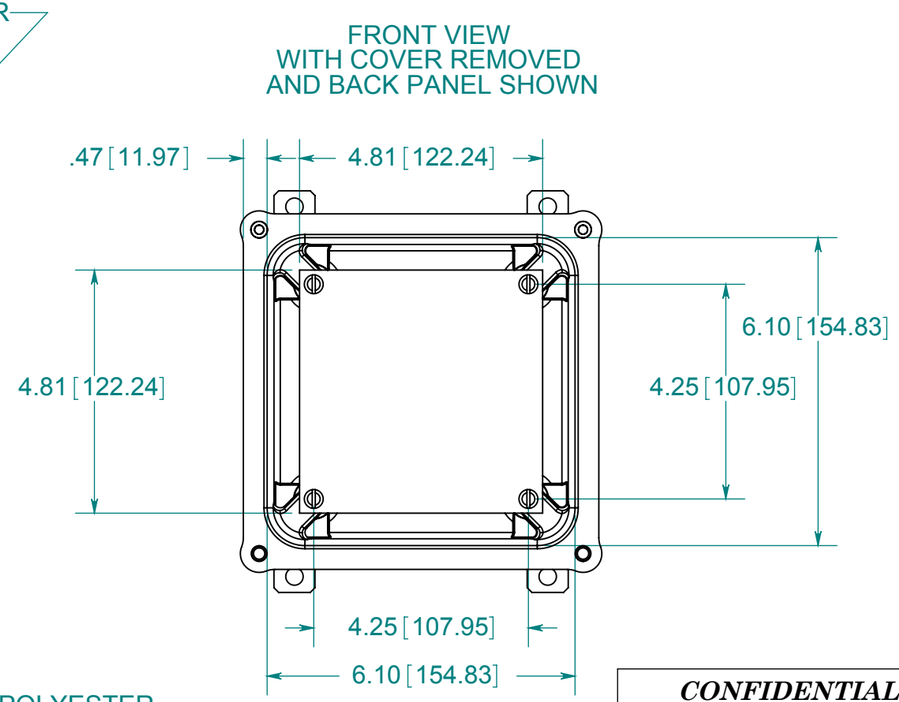

MATERIAL:
BOX- COMPRESSION MOLDED FIBERGLASS REINFORCED POLYESTER
COVER- COMPRESSION MOLDED FIBERGLASS REINFORCED POLYESTER
WINDOW- POLYCARBONATE

CONFIDENTIAL

THIS MATERIAL IS OWNED BY THE ALLIED MOULDED PRODUCTS COMPANY, IS DISCLOSED IN CONFIDENCE, AND IS NOT TO BE REPRODUCED OR DISTRIBUTED WITHOUT PRIOR WRITTEN PERMISSION FROM ALLIED MOULDED PRODUCTS.

® **ALLIED MOULDED PRODUCTS**
BRYAN, OHIO

The Original Fiber Glass Outlet Box

PRODUCT SERIES

AM JIC

PART No.

AM664TW