AM603612L

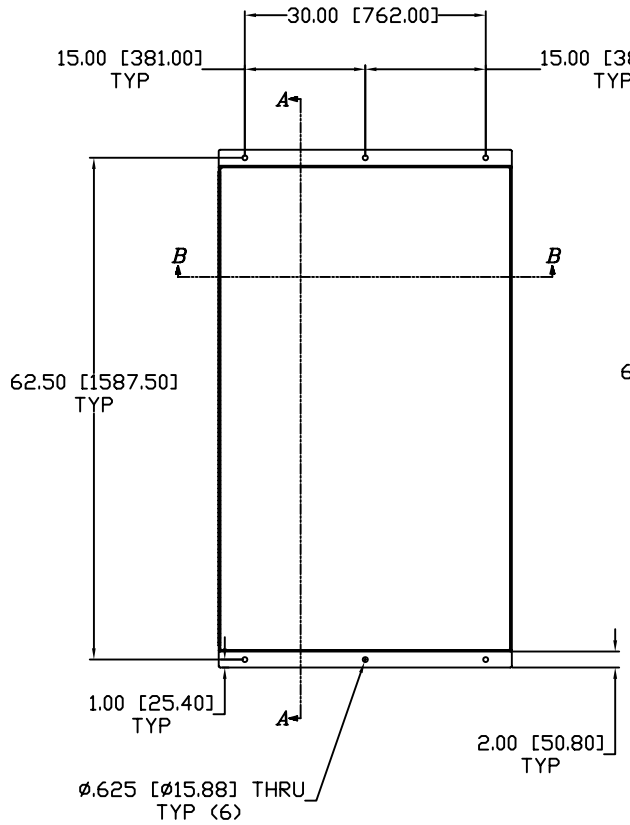

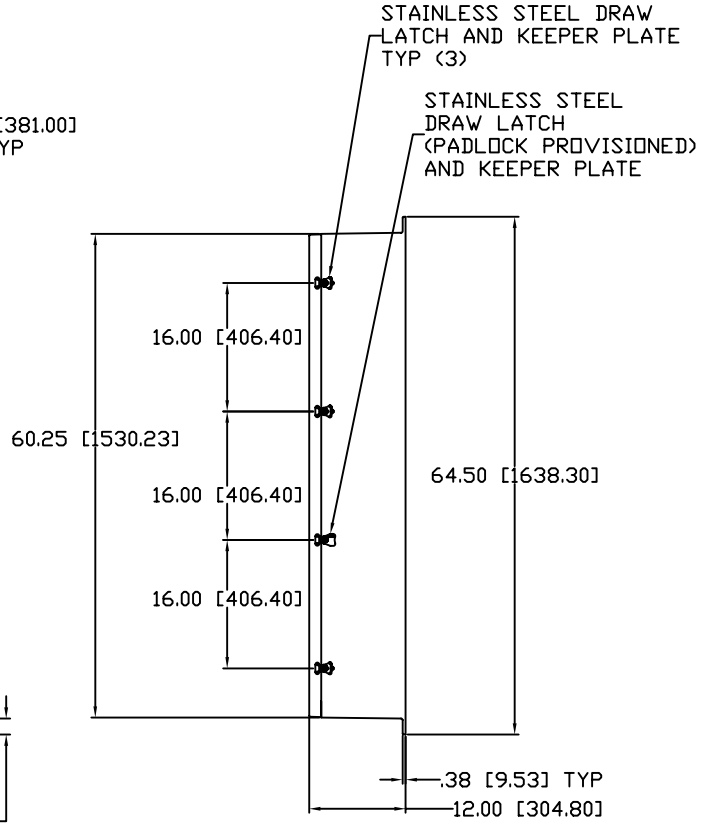

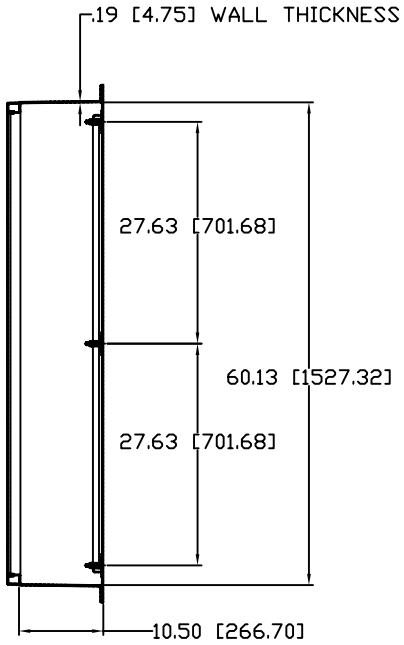

SECTION *A–A*

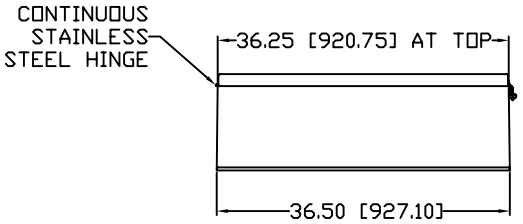

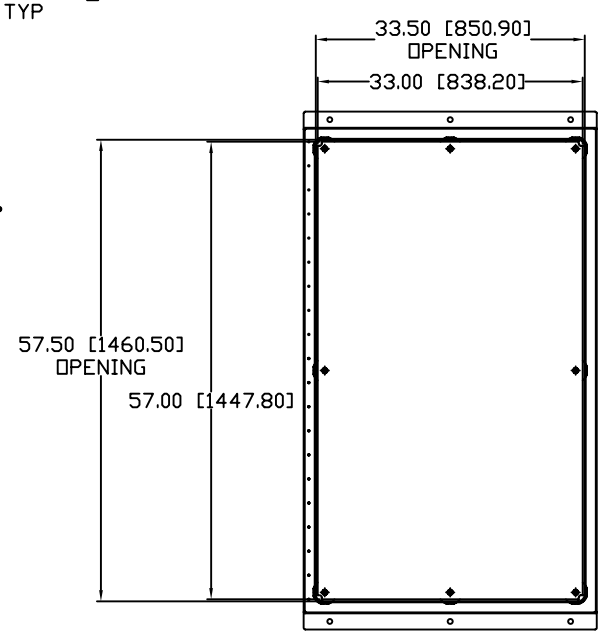

TOP VIEW WITH LID & GASKET REMOVED

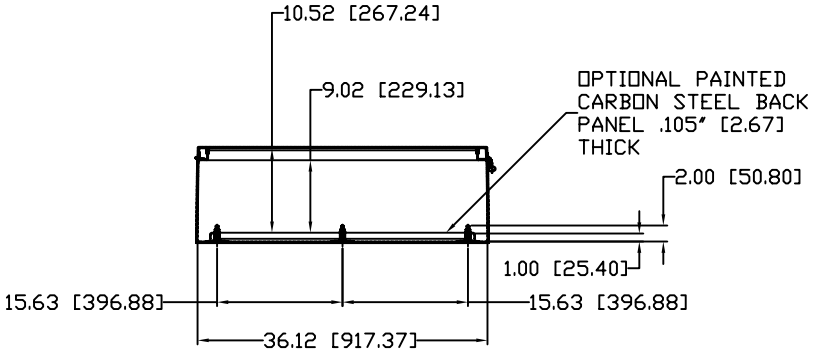

SECTION *B–B*

MATERIAL:
BOX AND COVER - FIBERGLASS

CONFIDENTIAL

ALLIED MOULDED PRODUCTS
BRYAN, OHIO
The Original Fiber Glass Outlet Box

PRODUCT SERIES
EMPIRE