AM1426RT

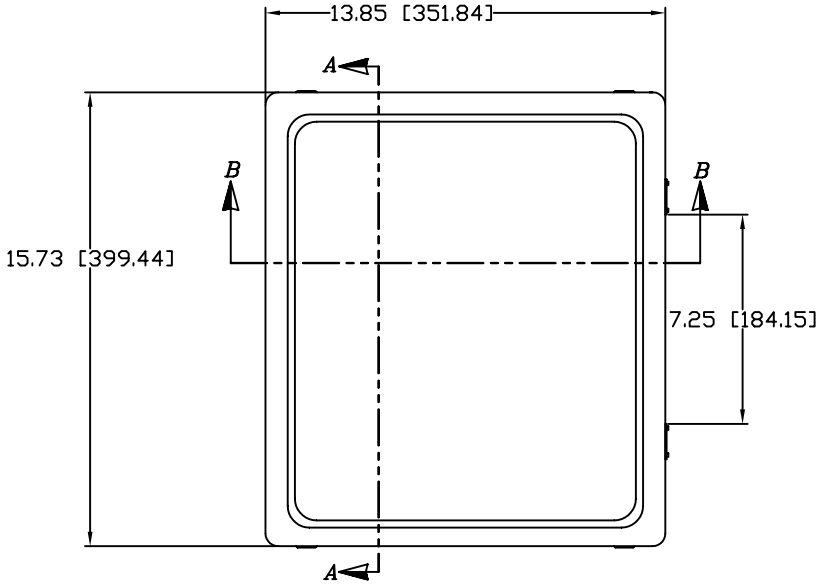

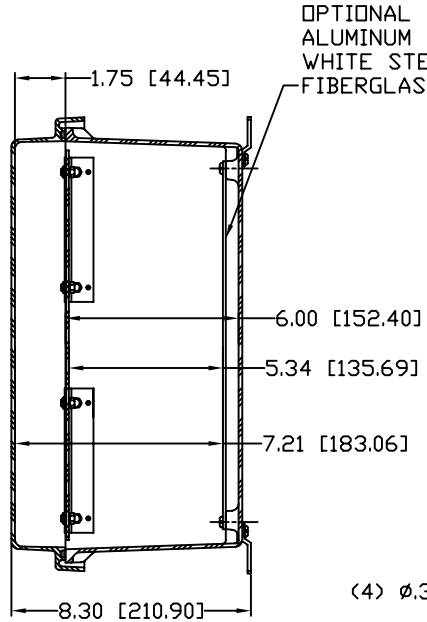

SECTION *A–A*

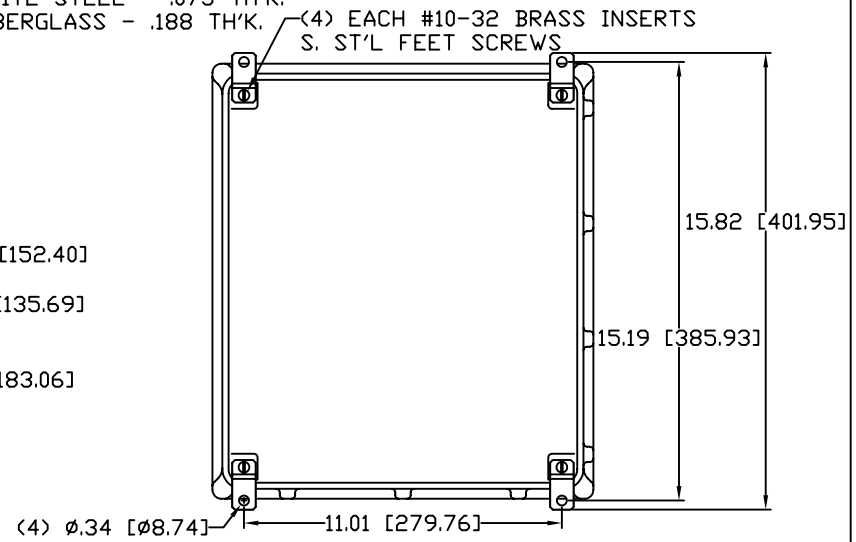

BACK VIEW

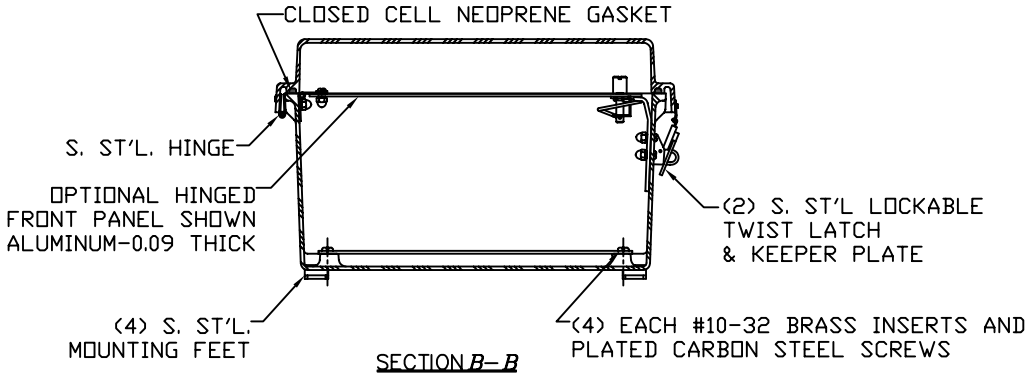

SECTION *B–B*

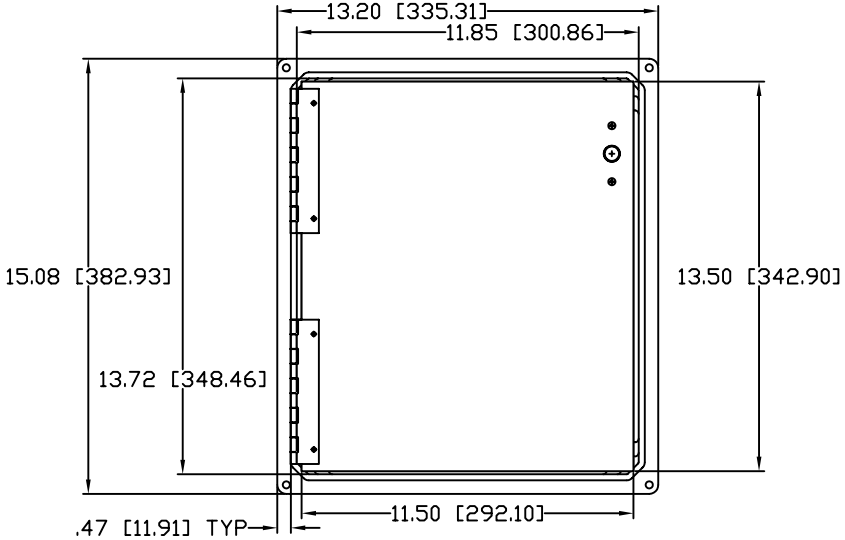

FRONT VIEW WITH LID REMOVED

MATERIAL:
BOX - COMPRESSION MOLDED FIBERGLASS REINFORCED POLYESTER
COVER - COMPRESSION MOLDED FIBERGLASS REINFORCED POLYESTER
WINDOWS - POLYCARBONATE

CONFIDENTIAL
THIS MATERIAL IS OWNED BY THE ALLIED MOULDED PRODUCTS COMPANY, IS DISCLOSED IN CONFIDENCE, AND IS NOT TO BE REPRODUCED OR DISTRIBUTED WITHOUT PRIOR WRITTEN PERMISSION FROM ALLIED MOULDED PRODUCTS.

ALLIED MOULDED PRODUCTS
BRYAN, OHIO
The Original Fiber Glass Outlet Box

PRODUCT SERIES
AM-R-JIC