AMU1426CCTF

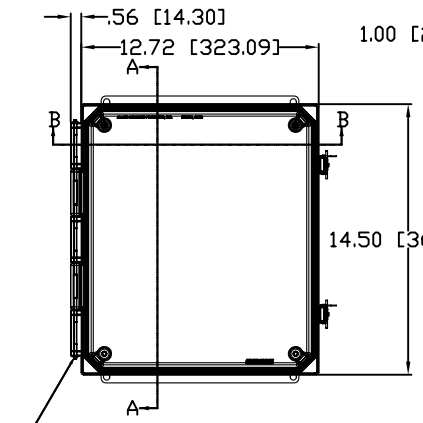

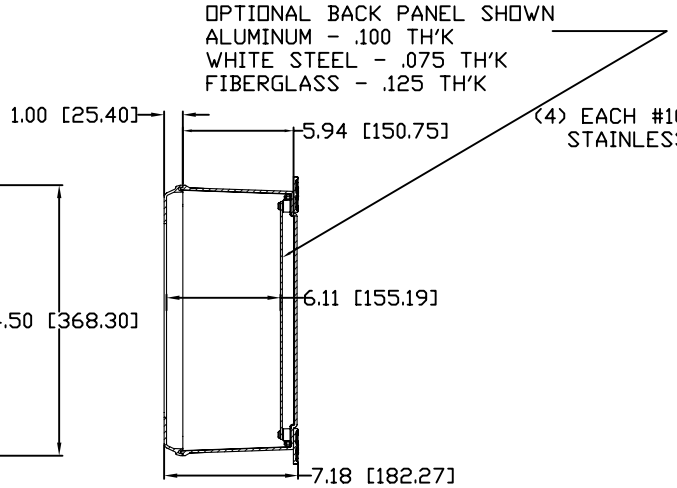

SECTION A-A

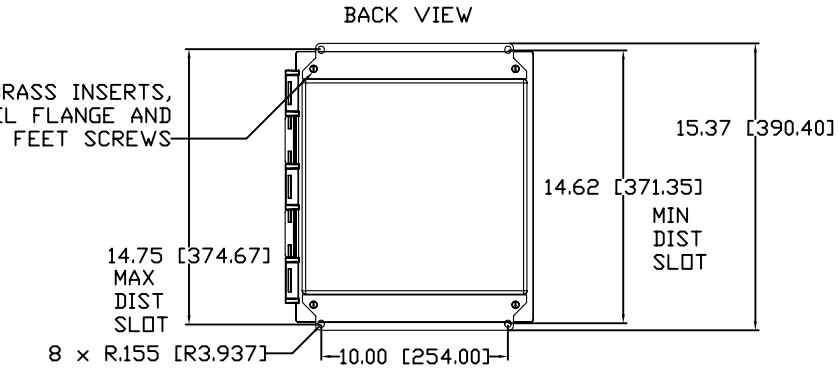

STAINLESS STEEL
HINGE PIN AND 2
PUSH NUT FASTNERS

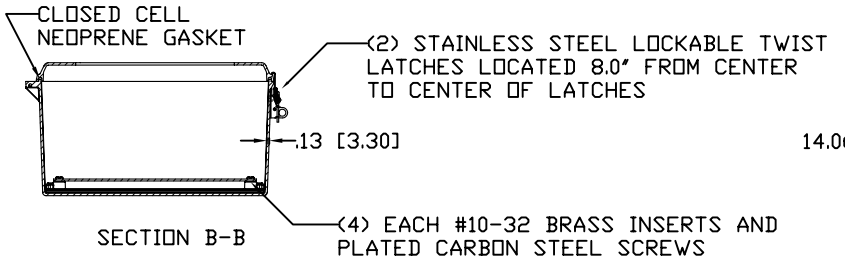

SECTION B-B

FRONT VIEW
WITH COVER REMOVED
AND BACK PANEL DISPLAYED

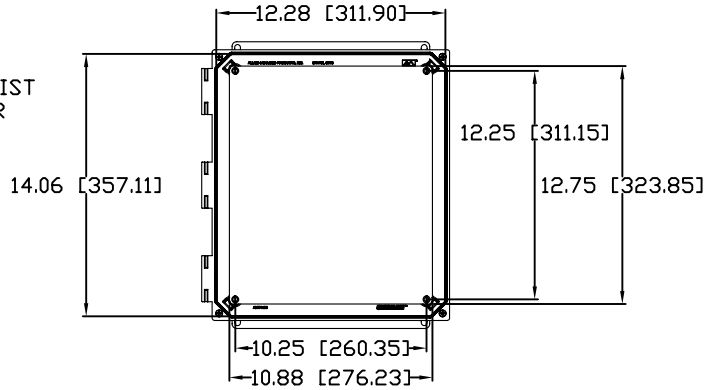

REV. 4/2/07

CONFIDENTIAL
THIS MATERIAL IS OWNED BY THE ALLIED MOULDED PRODUCTS COMPANY, IS DISCLOSED IN CONFIDENCE, AND IS NOT TO BE REPRODUCED OR DISTRIBUTED WITHOUT PRIOR WRITTEN PERMISSION FROM ALLIED MOULDED PRODUCTS.

ALLIED MOULDED PRODUCTS
BRYAN, OHIO
The Original Fiber Glass Outlet Box

PRODUCT SERIES
ULTRALINE™

MATERIAL:
BOX-COMPRESSION MOLDED FIBERGLASS REINFORCED POLYESTER
COVER-COMPRESSION MOLDED FIBERGLASS REINFORCED POLYESTER
CLEAR COVER AND WINDOWS-POLYCARBONATE