AMU864CCHF

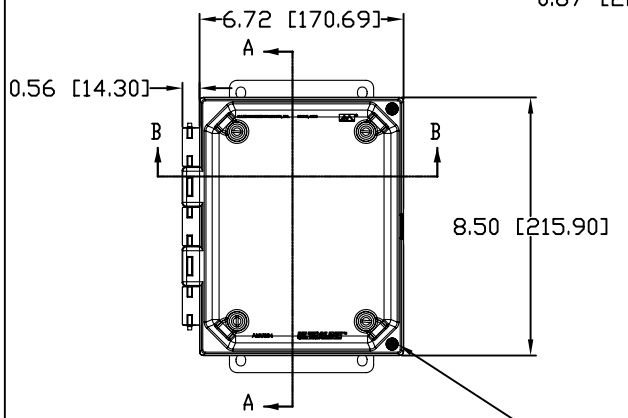

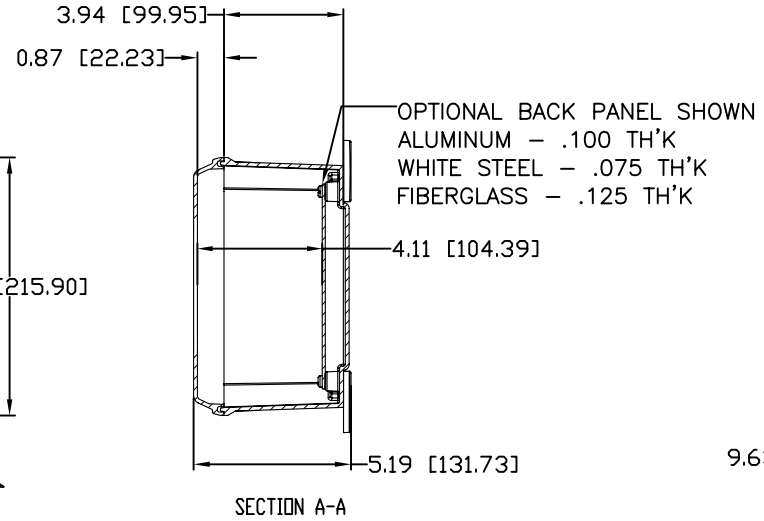

BACK VIEW

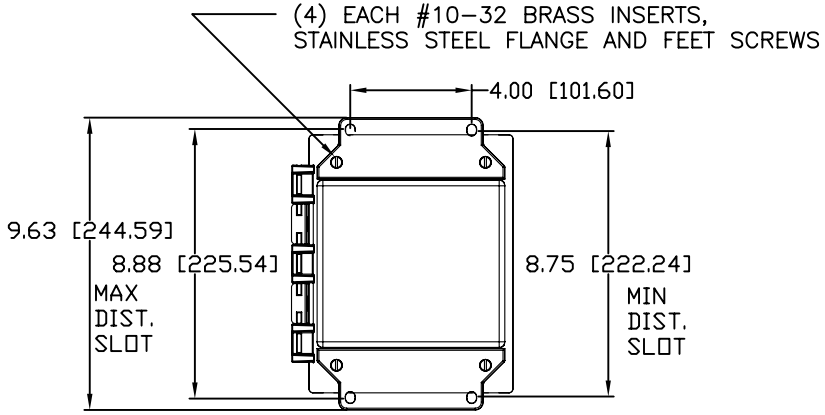

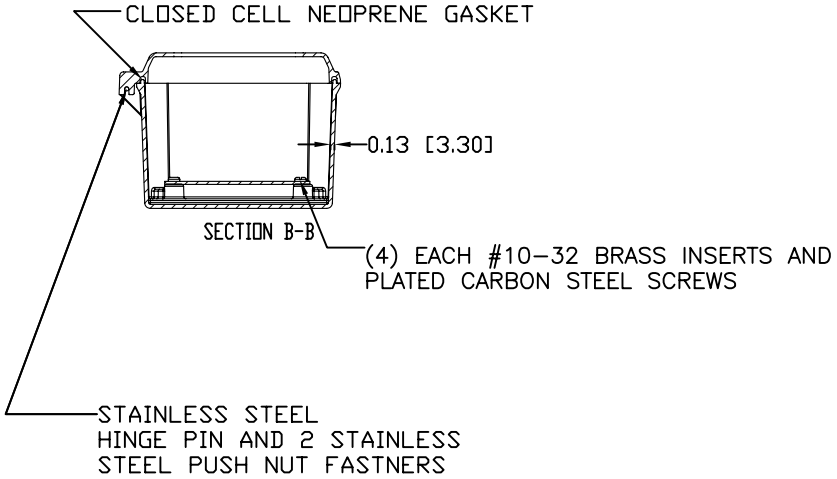

FRONT VIEW
WITH COVER REMOVED
AND BACK PANEL DISPLAYED

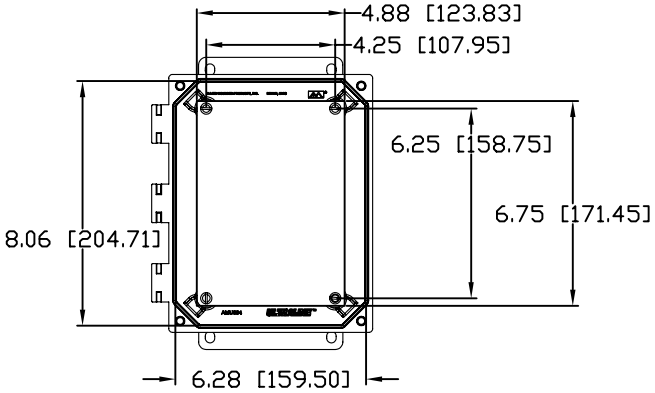

REV. 3/19/07

MATERIAL:
BOX-COMPRESSION MOLDED FIBERGLASS REINFORCED POLYESTER
COVER-COMPRESSION MOLDED FIBERGLASS AND REINFORCED POLYESTER
CLEAR COVER AND WINDOWS-POLYCARBONATE

CONFIDENTIAL
THIS MATERIAL IS OWNED BY THE ALLIED MOULDED PRODUCTS COMPANY, IS DISCLOSED IN CONFIDENCE AND IS NOT TO BE REPRODUCED OR DISTRIBUTED WITHOUT PRIOR WRITTEN PERMISSION FROM ALLIED MOULDED PRODUCTS.

ALLIED MOULDED PRODUCTS
BRYAN, OHIO
The Original Fiber Glass Outlet Box

PRODUCT SERIES
ULTRALINE™